Toni by Fibre Mood

Toni by Fibre Mood

No-ribbon version

★★☆☆☆

Ribbon version

★★★☆☆

XS - XXXL

A loose, straight dress, that comes to just above the knee with half-length raglan sleeves, a round neckline and side pockets in the side seam. It's elegant in its simplicity. If you opt for a ribbon on the side seam, you'll end up with a more sporty look.

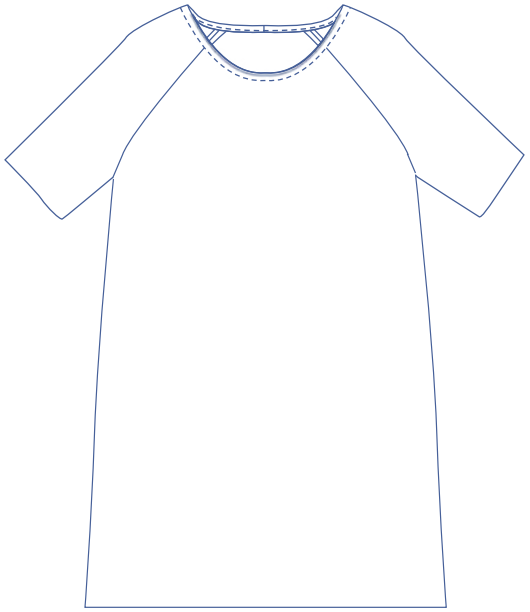

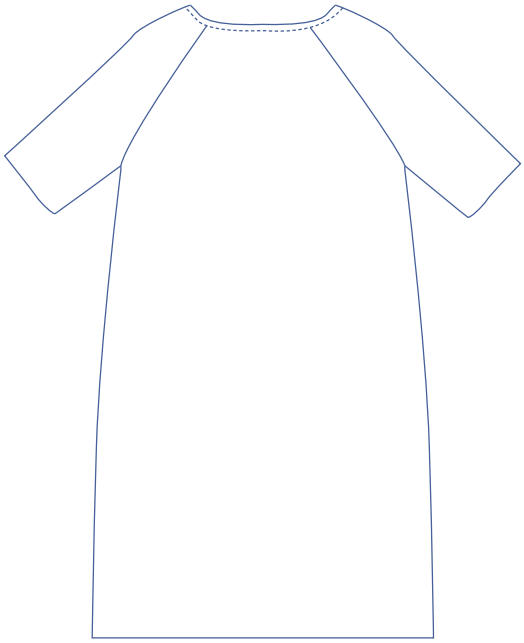

sizing chart

size	XS	S	M	L	XL	XXL	XXXL
EUR	32 34	36 38	40 42	44 46	48 50	52 54	56 58 60
UK	4 6	8 10	12 14	16 18	20 22	32 34	24 26 28
CS (cm)	76 80	84 88	92 96	100 104	110 116	122 128	134 140 146
HM (cm)	86 90	94 97	100 103	106 109	115 120	125 130	135 140 145

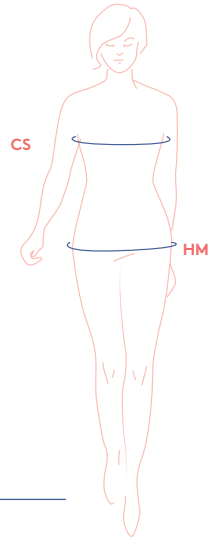

Chest size (CS): Measure horizontally at the widest point of the bust.
Hip measurement (HM): Measure horizontally at the widest point of the lower body.

measurements

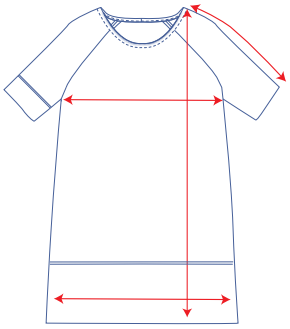

size	XS	S	M	L	XL	XXL	XXXL
length (cm)	88	89	90	93.25	97	100.25	101.75
sleeve* (cm)	40.5	42	43.5	45	47	49.25	51.25
1/2 CS (cm)	50	54	58	62	67	73	79
1/2 HC* (cm)	53.25	57.25	61.25	65.25	70.25	76.25	82.25

** The sleeve length includes the shoulder.*
*** (HC) hem circumference (average)*

Compare the stated lengths to the measured or desired lengths. Lengthen or shorten the dress and/or the sleeves by cutting the pattern pieces at the indicated double lines and then spreading the pattern pieces out X cm from each other or overlapping them. Make sure that the CF and CB lines and the side seams all run straight through.

IMPORTANT
Adapt the amount of fabric used to the alterations that you are making to the pattern!

notions

- Thread
- Ribbon: see table (optional)
- Bias tape: see table (optional, because fabric used for pattern piece 5 can be used to make your own bias tape)
- Light cotton: 30 cm (version without self-made bias tape) or 85 cm (version using self-made bias tape)
- Fabric: see table

size	XS	S	M	L	XL	XXL	XXXL
ribbon (cm)	2x 68	2x 68	2x 68	2x 70	2x 72	2x 72	2x 72
bias tape (cm)	57	59	60	61	61	66	67

size	XS-S	M-L	XL	XXL	XXXL
fabric* (cm)	145	155	240	250	255
fabric** (cm)	145	155	160	240	250

** 140 cm wide / ** 154 cm wide*

fabric advice

- The Toni dress must be made using a jersey fabric.
- Depending on the look you want, you can use various types of fabrics.
- We used a black interlock fabric. Interlock (e.g., Ponte di Roma) is a double-knit jersey that looks the same on both the front and the back. The fabric is heavier and stiffer than single jersey, which is only one layer, and is slightly stretchy.
- The grey version with ribbon is made of textured, medium-weight jersey.
- Select a fabric that has enough weight to give the dress more body. A jacquard or a textured knit are ideal options.

---

pattern pieces & seam allowances (in cm)

1. for fabrics that fray easily

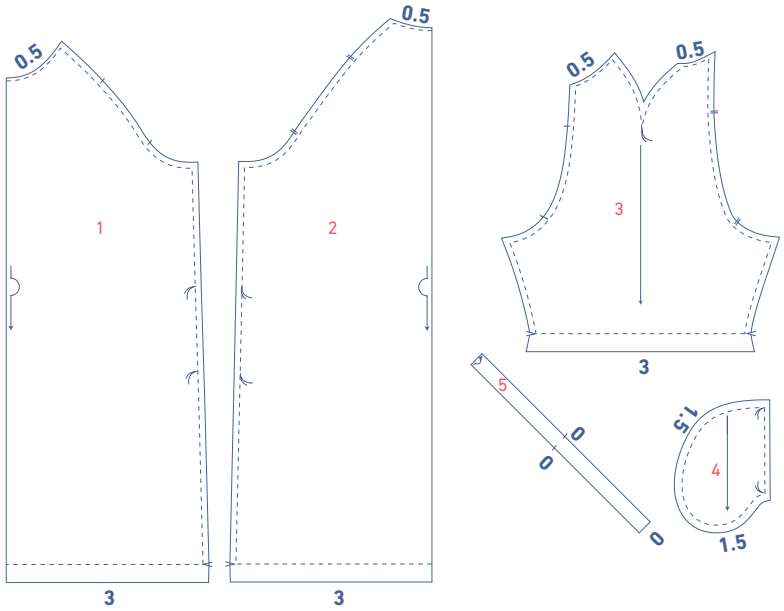

1 front: 1x on fabric fold
2 back: 1x on fabric fold
3 sleeve: 2x
4 pocket: 2x in fabric (4S)
2x in light cotton (4F)
5 neckline bias tape:
1x at fabric fold in light cotton
(optional, purchased bias tape
can also be used)

2. for fabrics that do not fray

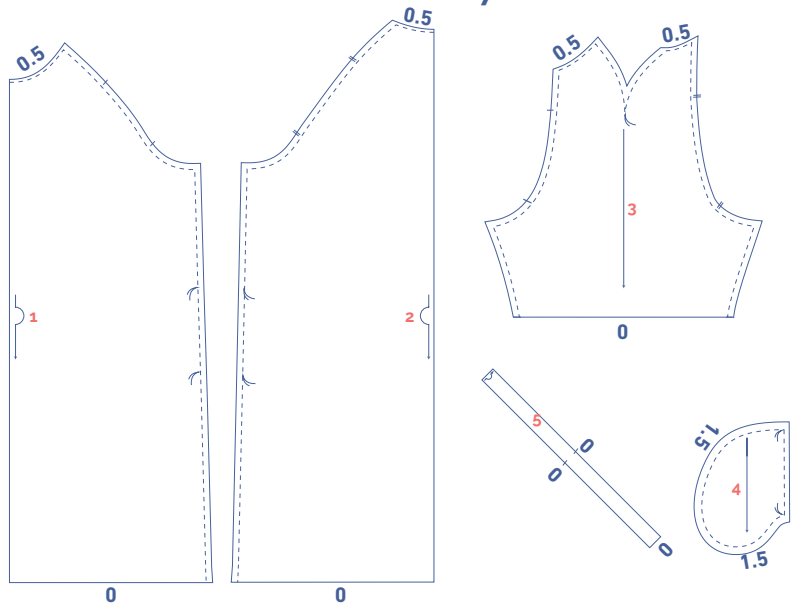

Draw a seam allowance of 1 cm all the way around the paper pattern pieces unless stated otherwise in the illustrations. The sides of pattern pieces 1, 2 and 5 that lie on the fabric fold ( ) do not have any seam allowance.

Indicate important points on the outline of the pattern:

- by making a nick where a vertical stripe (I) is or double vertical stripes (||) are
- by cutting a notch out where a V notch (V) is
- cut a small corner out of pieces 1, 2 and 5, which lie on the fabric fold, to mark the middle of these pieces.

Mark the places for the pockets () and other important points (◇) using needle and thread.

The lines on pattern piece 5 are the same for size L and XL.

fabric plan

fabric plan for a fabric width of 140 cm

XS-L

Fold the fabric's selvedges toward the center, so that two fabric folds are created. Cut the front (1) and back (2) along the fabric fold.

Put the selvedges back together and fold the fabric in half to cut the sleeve (3) and the pocket piece (4S).

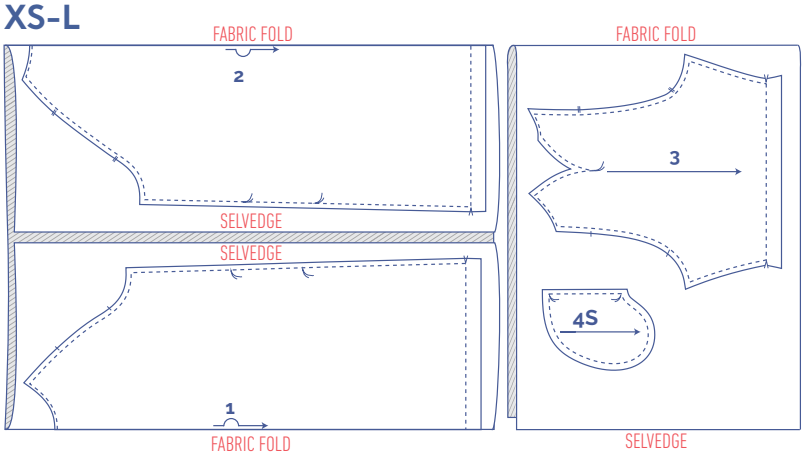

XL-XXXL

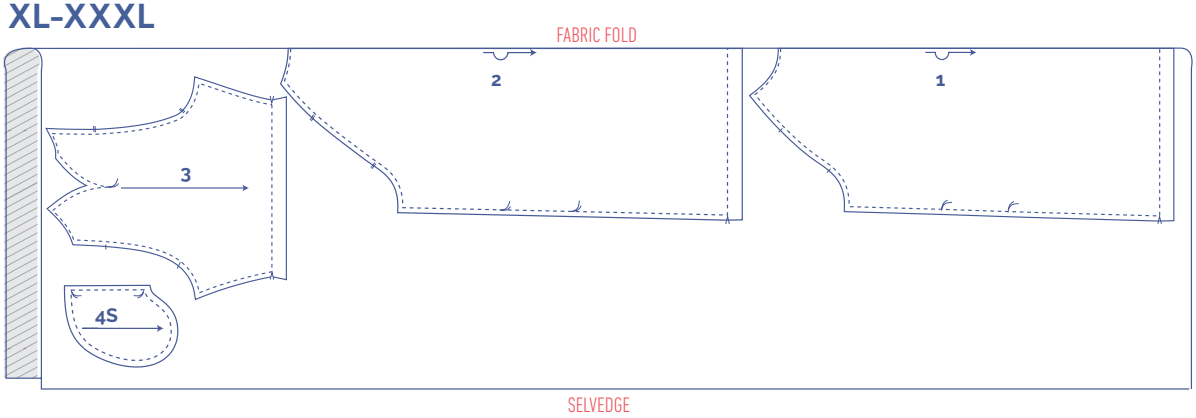

Fold the fabric in half and cut the front (1) and back (2) consistently along the fabric fold; the sleeve (3) and the pocket (4S) are not part of the fabric fold.

cotton

Fold the fabric in half and cut out the pocket (4F).

Refold the remaining fabric in half by folding a tip of the fabric diagonally. Place the neckline bias tape (5) against the fabric fold and cut it out.

If you are using purchased bias tape, this last part of the fabric plan can be omitted.

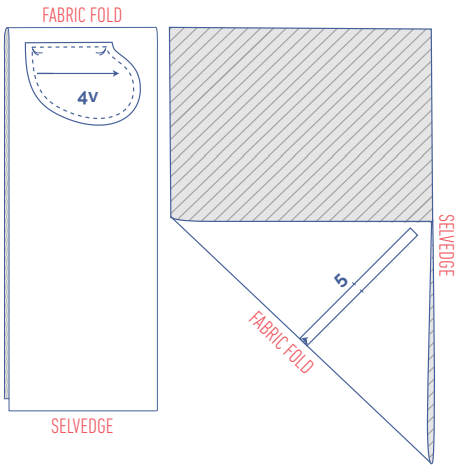

fabric plan for a fabric width of 154 cm

XS-XL

Fold the fabric's selvedges toward the centre, so that two fabric folds are created. Cut the front (1) and back (2) along the fabric fold.

Put the selvedges back together and fold the fabric in half to cut the sleeve (3) and the pocket piece (4S).

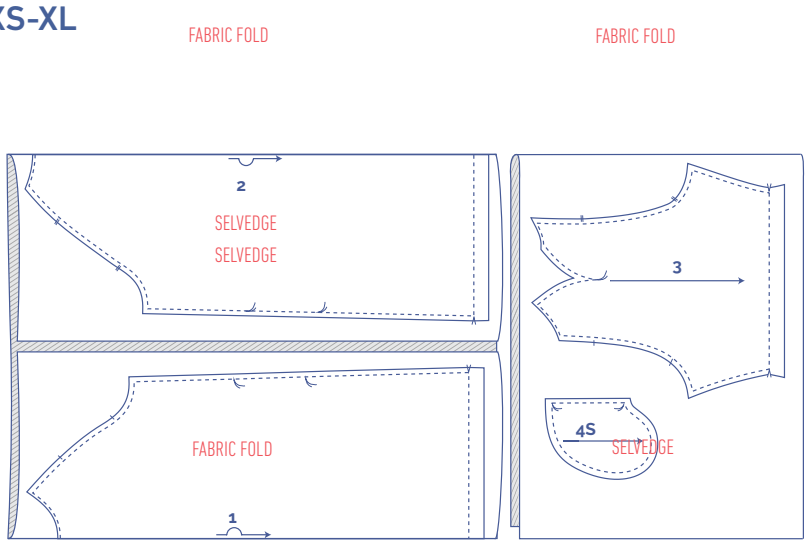

XXL-XXXL

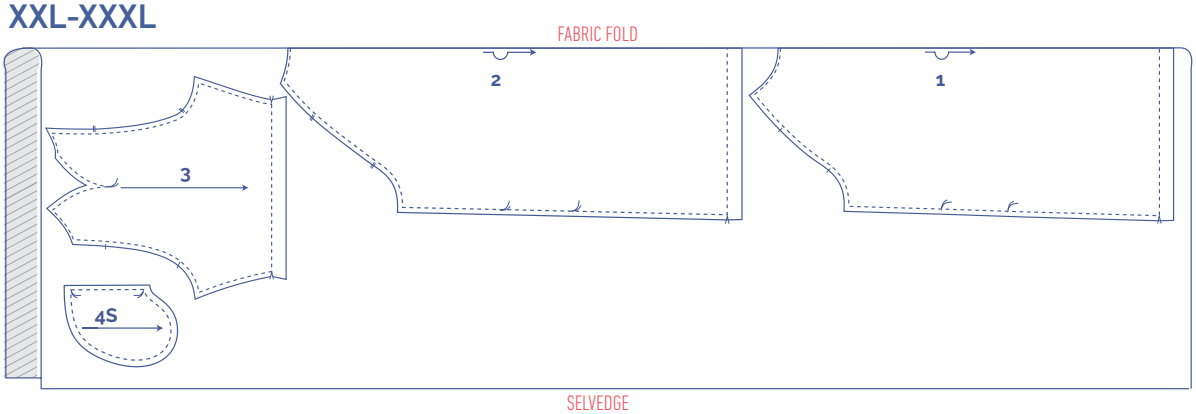

Fold the fabric in half and cut the front (1) and back consistently along the fabric fold; the sleeve (3) and the pocket (4S) are not part of the fabric fold.

cotton

Fold the fabric in half and cut out the pocket (4F).

Refold the remaining fabric in half by folding a tip of the fabric diagonally. Place the neckline bias tape (5) against the fabric fold and cut it out.

If you are using purchased bias tape, this last part of the fabric plan can be omitted.

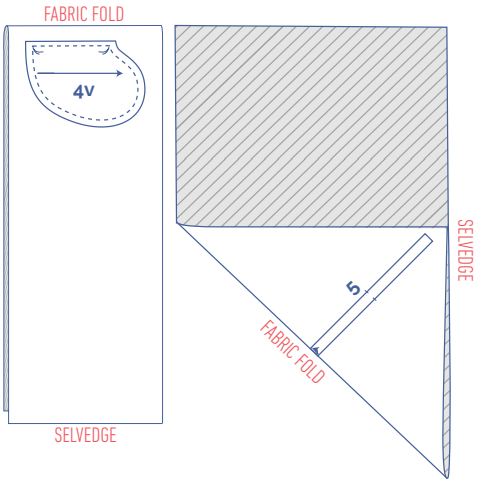

sewing instructions

The method used to finish sewing the garment together depends on the fabric used. Parts are always sewn together with the right sides of the fabric matching exactly, unless otherwise stated.

Key with symbols and abbreviations used

- right side
- reverse side
- right side cotton
- reverse side cotton
- ribbon

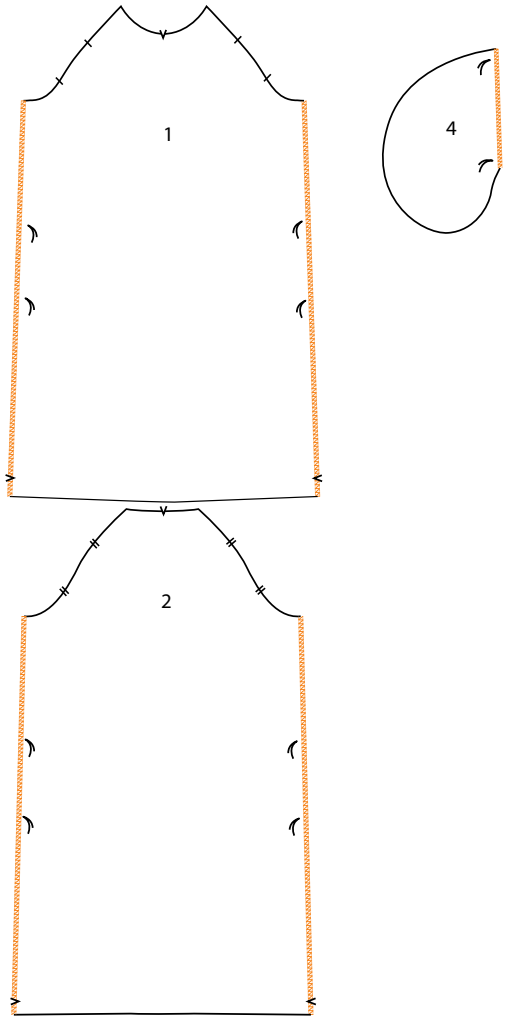

1

a

Finish the side seams of the front (1) and the back (2) with an overlock stitch. Do the same with the right-hand side of the pocket pieces (4).

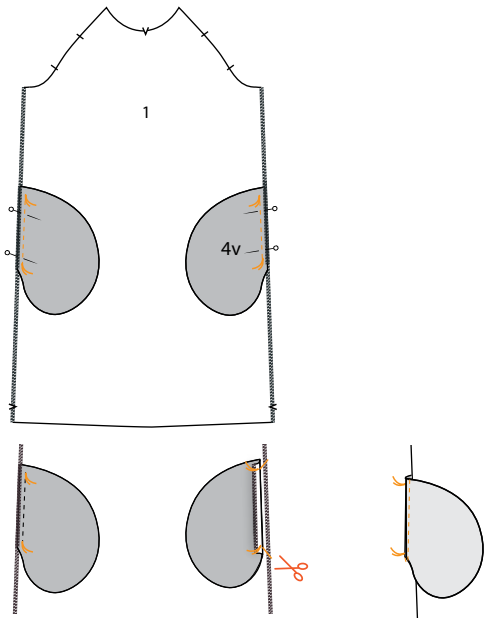

b

Pin and sew the cotton pocket (4F) to the front (1) between the basting threads.

Cut diagonally along the front seam allowance. Fold the pocket and the seam allowance to the side. 2 mm from the seam, sew through all the layers of the pocket. Set the pocket aside.

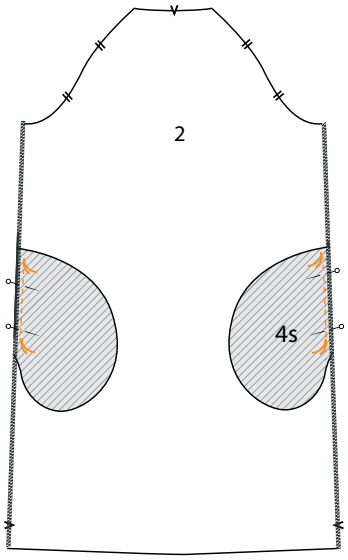

c

Pin and sew the fabric pocket (4S) to the front (2) between the basting threads.

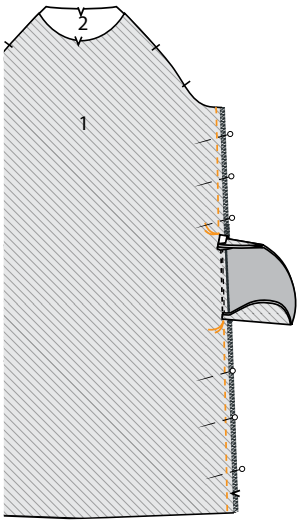

2

a

Pin and sew the side seams of the front and back together above and below the pocket opening, up to the basting threads. Press the seam allowance open. Press the pocket seam open as well.

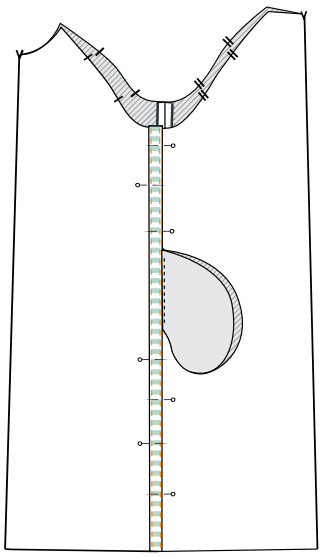

b

ATTENTION: for the no-ribbon version, skip the section below.

Pin and sew the ribbon to the front, with the side of the ribbon angled along the side seam. At the pocket opening, the side of the ribbon lines up next to the fold line (the location of the pocket opening). Make sure that the pocket pieces are to the side so that these won't been sewn on to the rest.

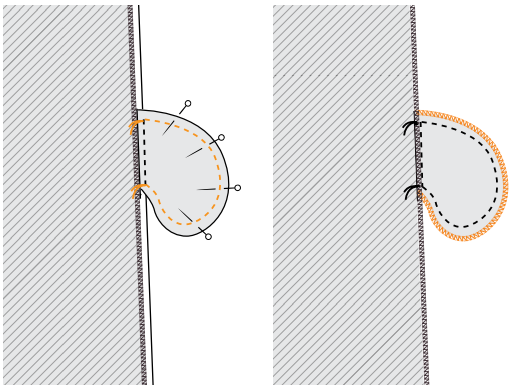

c

Pin and sew the contours of the pocket pieces together at 1.5 cm. Fold the front and back to the side so that you can easily sew with accuracy to and from the basting threads Finish the raw edges using an overlock stitch.

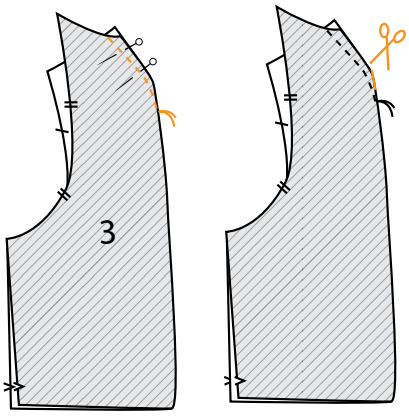

3

a

Sew the shoulder dart right up to the basting thread.

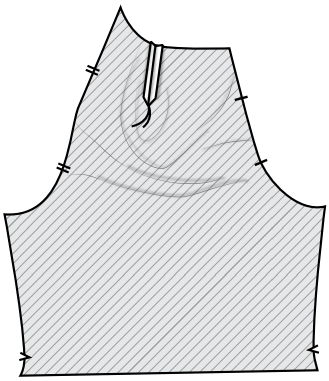

Clip the shoulder dart to the end and press open so that the fabric thickness is distributed.

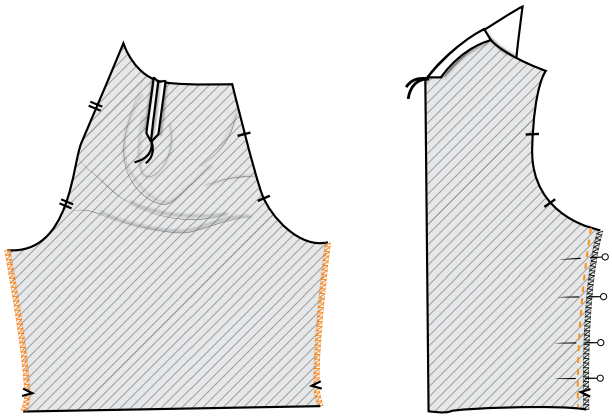

b

Overlock the sleeve sides. Pin and sew the sides. Press the seam allowance open.

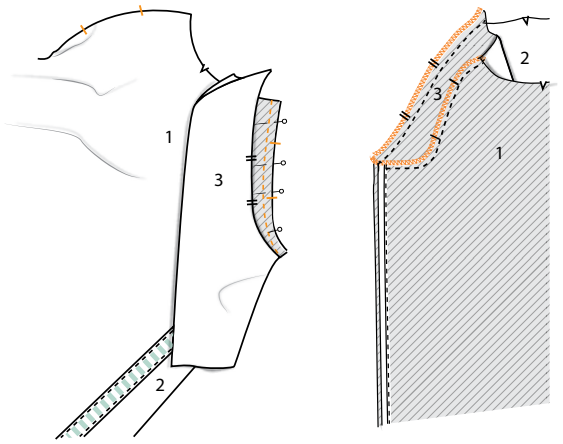

c

Pin and sew the sleeve to the armhole, matching the side seams to the corresponding nicks. Distribute the fabric between the markings. Finish the raw edges together using an overlock stitch.

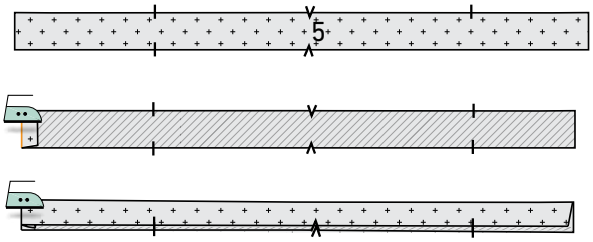

4

a

Press 1 short side of the bias tape (whether self-made or store bought) 1 cm over to the wrong side. Press the bias tape, in half lengthwise with the right side of the fabric facing outward.

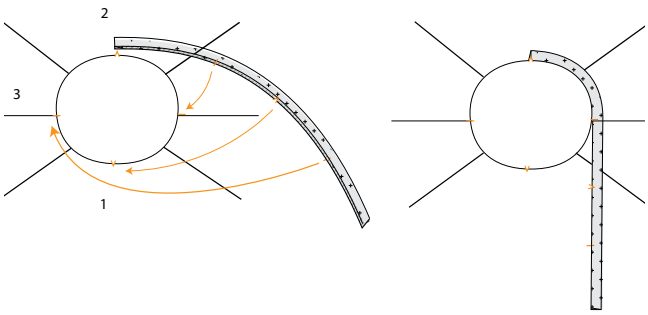

b

Pin the bias tape to the neckline along the right side with the ironed ends level with the CB, the other V notch with the V notch marking the CF and the other nicks matched to the shoulder seams.

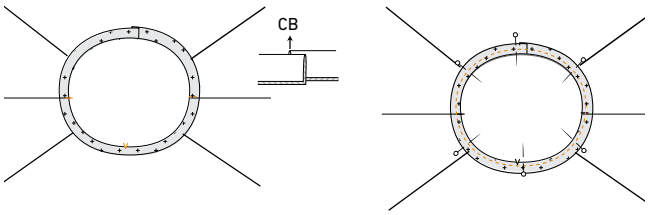

The extended end of the bias tape is on top of the folded end. Sew into place at 0.5 cm.

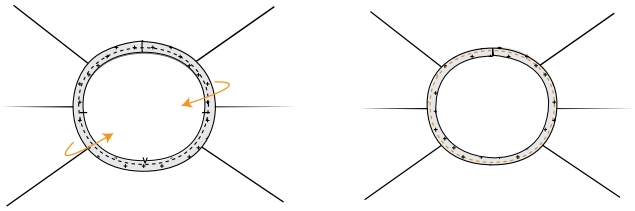

c

Fold the bias tape and the seam allowance out of the way and sew the bias tape into place at 2 mm from the seam through all the layers of fabric.

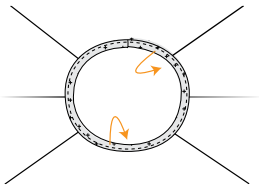

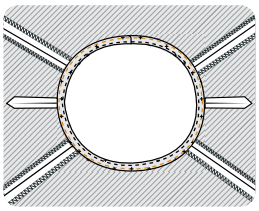

d

Fold the bias tape all the way over to the wrong side and sew it into place right next to the edge.

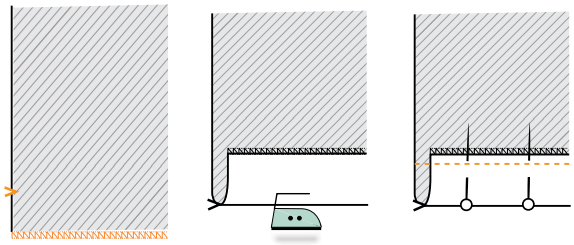

5

Finish the hem and the sleeve hem with an overlock stitch when using a fabric that frays.

Iron the hems up to the V notch. Sew or stitch the hems.